TECHNICAL DATA

Model	BYC-070TA1	BYC-103TA1	BYC-136TA1
Power Supply		380-415V/3/60Hz	
Heating Capacity at Air 26℃, Water 26℃, Humidity 80%			
Heating Capacity (kBTU/h)	238.849-56.300	351.450-84.621	464.051-110.553
Heating Capacity（kW)	70～16.5	103～24.8	136～32.4
Power Input (kBTU/h)	34.232-3.480	50.500-5.255	66.400-6.858
Power Input（kW)	10.03～1.02	14.80～1.54	19.46～2.01
COP	16.11～6.98	16.09～6.96	16.15～6.99
Heating Capacity at Air 15℃, Water 26℃, Humidity 70%			
Heating Capacity (kBTU/h)	174.019-41.286	259.322-62.442	344.626-81.550
Heating Capacity（kW)	51～12.1	76～18.3	101～23.9
Power Input (kBTU/h)	34.940-5.459	52.172-8.257	69.062-10.748
Power Input（kW)	10.24～1.6	15.29～2.42	20.24～3.15
COP	7.56～4.98	7.55～4.97	7.59～4.99
Cooling Capacity at Air 35℃, Water 27℃			
Cooling Capacity(kBTU/h)	129.661-31.050	197.904-48.111	259.323-63.125
Cooling Capacity（kW)	38～9.1	58～14.1	76～18.5
Power Input (kBTU/h)	35.520-4.640	54.219-7.200	70.461-9.349
Power Input（kW)	10.41～1.36	15.89～2.11	20.65～2.74
EER	6.69～3.65	6.68～3.65	6.74～3.68
Rated Power Input（kW)	10.0	15.0	20.0
Rated Current(A)	18	27	36
Max Power Input（kW)	15.0	22.0	30.0
Max Current(A)	26	38	54
Refrigerant		R32	
Compressor Type		Mitsubishi inverter	
Heat Exchanger		Titanium	
Expansion Valve		Electronic EEV	
Air Flow Direction		Vertical	
Water Flow Volume（m3/h)	20	30	40
Net Dimensions(L*W*H)（mm)	1416*752*1055	1250*1080*1870	2150*1080*2180
Package Dimensions(L*W*H)（mm)	1580*880*1150	1300*1100*1950	2230*1120*2200
Working temperature range（℃)	-15～43	-15～43	-15～43
Heating temperature range （℃)	15～40	15～40	15～40
Cooling temperature range （℃)	8-28	8-28	8-28
Noise（dB)	⩽59	⩽62	⩽65
Net Weight（kg)	280	420	750
Gross Weight（kg)	320	460	810
Water connection(mm)	63	63	75

* Please refer to the nameplate for product upgrades or changes in specifications without prior notice.
* Draft parameters, refer to final specifications for actual performance.

Solareast Heat Pump Ltd.

Address: No.73 Defu Road. Xingtan Town, Shunde Foshan, Guangdong, China
Tel: +86 757 29380616
E-mail: heatpump@solareast.com

202503 V1.0

Website Facebook LinkedIn YouTube



R32 Inverter Commercial Swimming Pool Heat Pump

Reliable heating, smart control, and flexible deployment for diverse commercial pool applications.



R32 Inverter Commercial Swimming Pool Heat Pump

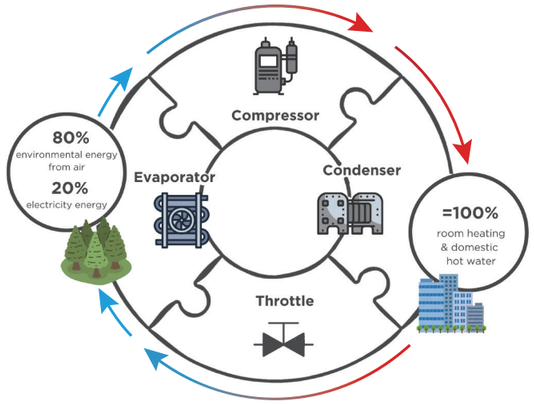

Environmentally Conscious Choice

Heating from air

- **Eco-friendly**
- **Energy saving**
- **High efficiency**

Traditional pool heating systems, such as fossil fuel boilers or electric heaters, often suffer from low efficiency — consuming more energy than the heat they deliver. This leads to high operating costs, excessive CO_2 emissions, and increasing pressure from rising energy prices and environmental regulations.

In contrast, inverter pool heat pumps powered by R32 refrigerant use renewable energy from the air to deliver efficient and consistent heating. With energy savings of up to 70%, they significantly reduce emissions and costs while ensuring stable performance in high-demand commercial environments. This makes them the smart, eco-friendly choice for hotels, gyms, resorts, and public swimming facilities.

SOLAREAST HEAT PUMPS



Applications

- Hotel
- Resort
- Gym & Fitness Club
- School
- Rehabilitation Center
- Apartment Complex
- Restaurant with Pool Access
- Public Swimming Pool
- Water Park
- Spa & Wellness Center
- Sports Club
- Community Center



01



R32 Eco-friendly Refrigerant

With a lower GWP and zero ozone depletion potential, R32 refrigerant is a climate-friendly solution for modern pool heat pumps. Its high volumetric capacity and superior energy efficiency help reduce emissions while delivering reliable performance — making it the ideal balance between sustainability and functionality.

02



WiFi Remote Control

Users monitor and operate heat pumps from anywhere, anytime, using a smartphone or tablet. Real-time data access enables precise adjustments, energy optimization, and performance tracking.This connectivity simplifies operation, reduces maintenance costs, and enhances user convenience, making it ideal for commercial applications.

03



Integrates OTA and DTU Connectivity for Seamless IoT Management

Integrates OTA and DTU Connectivity for Seamless IoT Management With OTA updates and DTU connectivity, the system ensures efficient and reliable IoT management. OTA enables remote updates and optimizations, while DTU provides stable data transmission for real-time monitoring. These features enhance IoT functionality, offering convenience, scalability, and seamless integration for advanced heating solutions.

04



Maximum 16 Heat Pumps Can Be Operated in Parallel

The system supports parallel operation of up to 16 heat pumps, offering unparalleled scalability for large commercial or industrial applications. This configuration allows for flexible capacity adjustment, ensuring efficient energy use based on real-time demand.

05

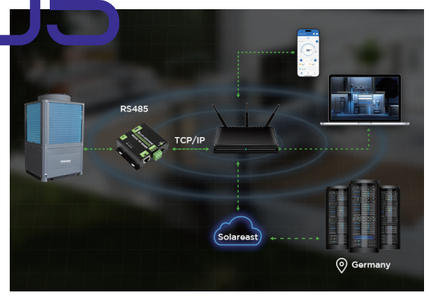

MODBUS RS485 Communication

MODBUS RS485 adapter allows seamless integration of the heat pump system with home or building management systems. This enables real-time adjustments to the heat pump's output based on current heat demand and building specifications. A wide range of operating parameters, including modes, flow rates, and room temperatures, can be monitored, gathered, and modified, ensuring efficient and precise system operation.

06



Versatile Solution for Commercial Applications

Designed for flexibility and performance, our inverter pool heat pump adapts seamlessly to various commercial settings. Whether it's a hotel, resort, spa, gym, or public swimming facility, it delivers stable heating efficiency, low noise operation, and long-term reliability — meeting the diverse needs of high-demand environments.

Equipment Dimensions

70kW Commercial Swimming Pool Heat Pump

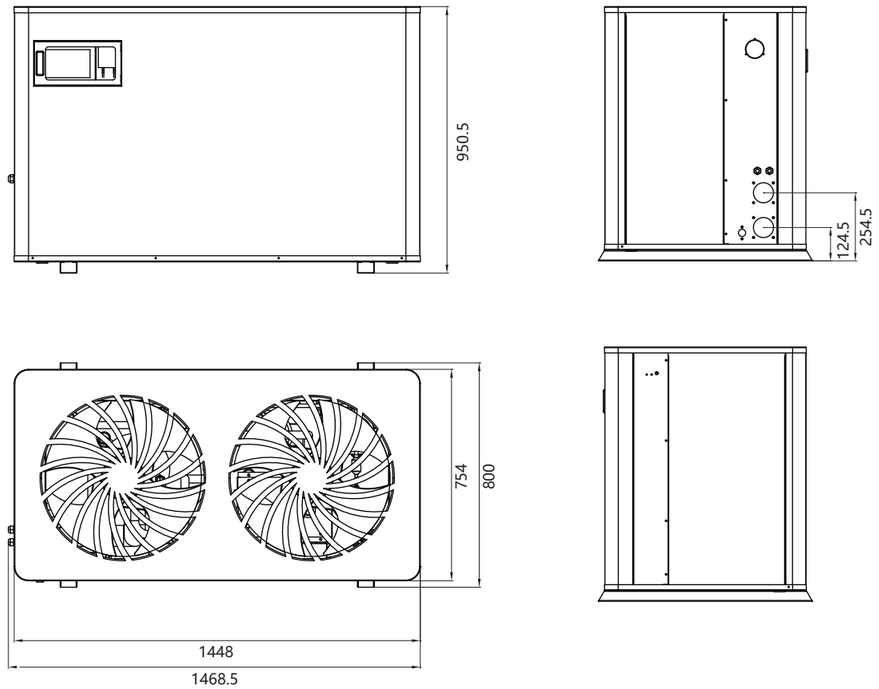

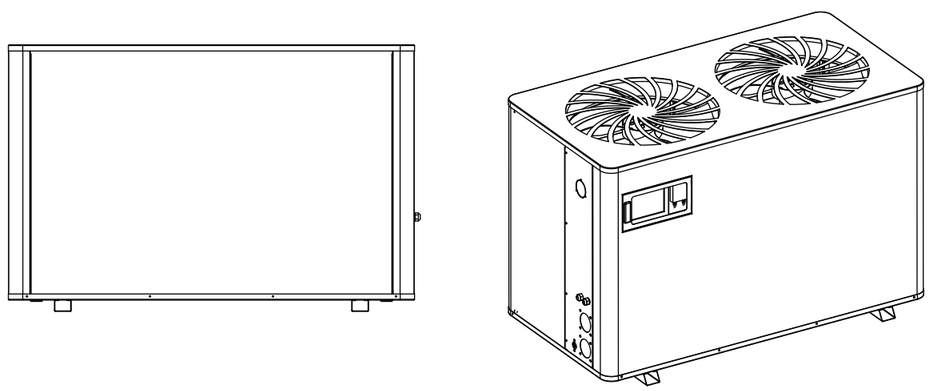

Heating Performance

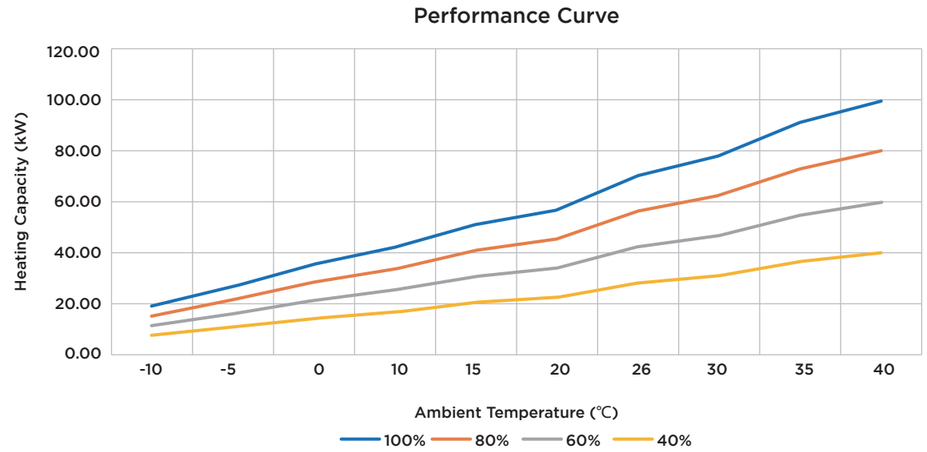

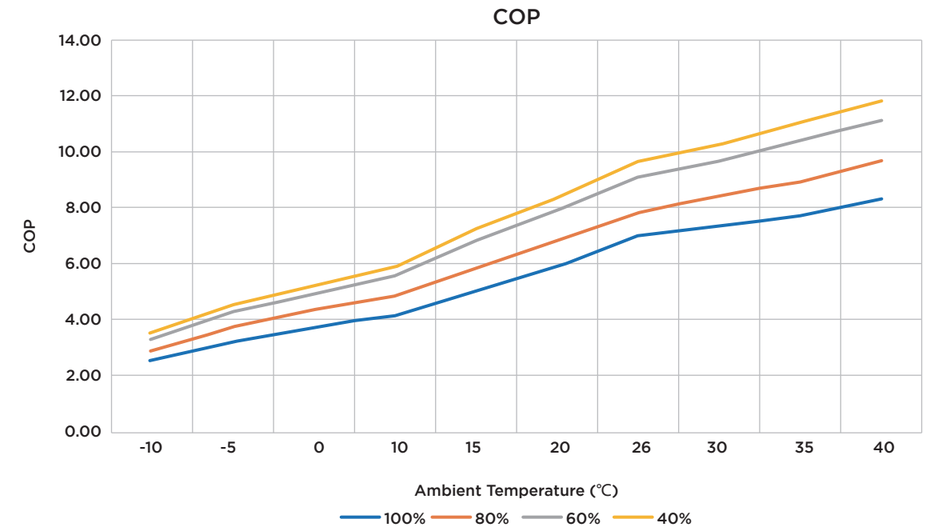

Equipment Dimensions

103kW Commercial Swimming Pool Heat Pump

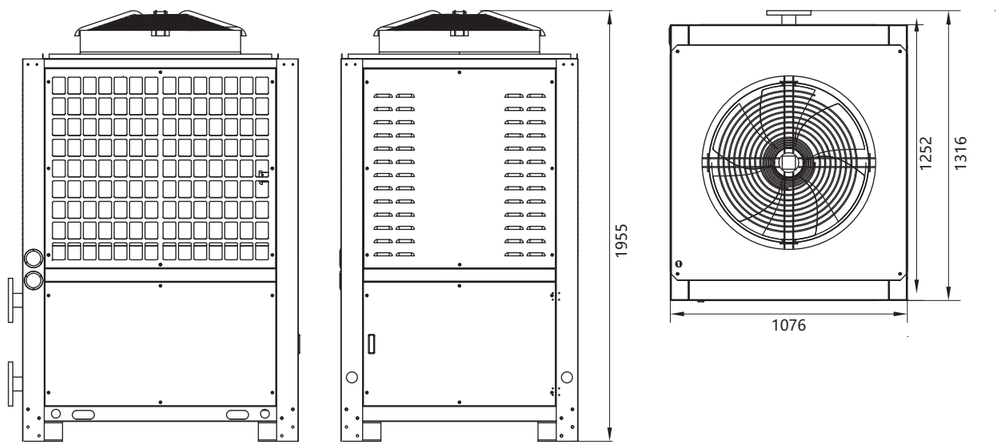

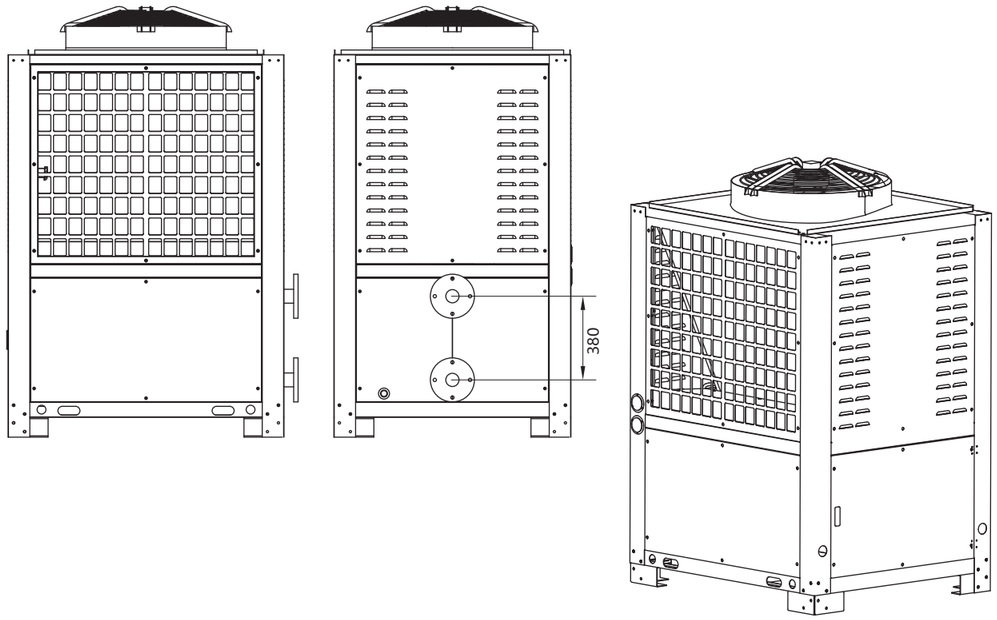

Heating Performance

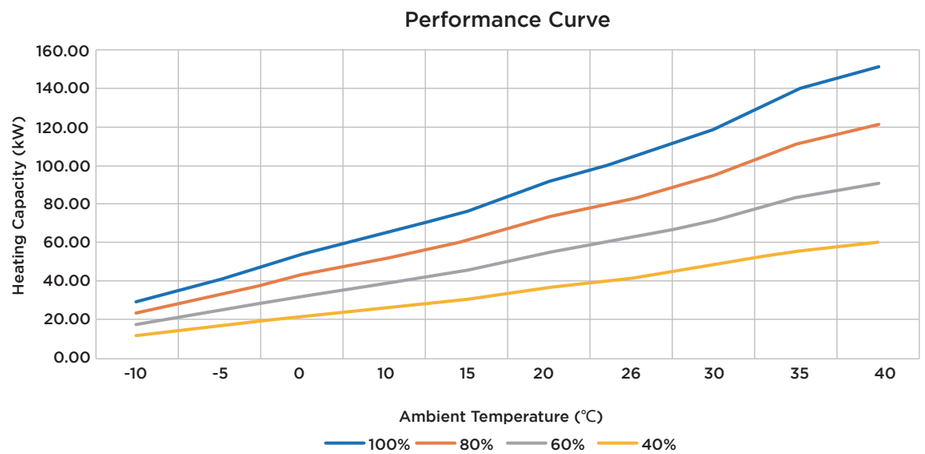

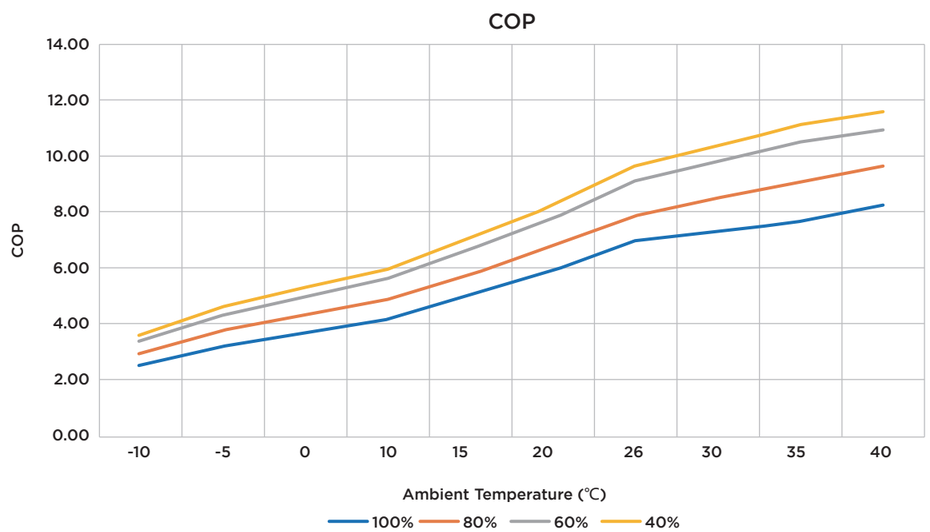

Equipment Dimensions

136kW Commercial Swimming Pool Heat Pump

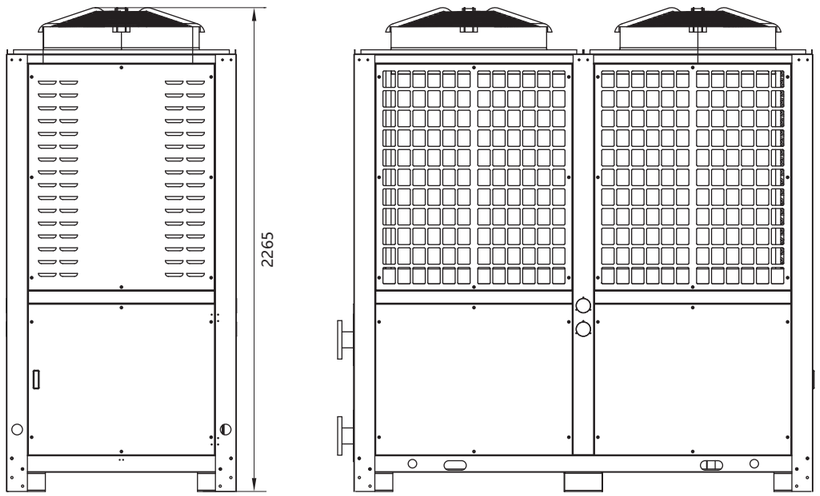

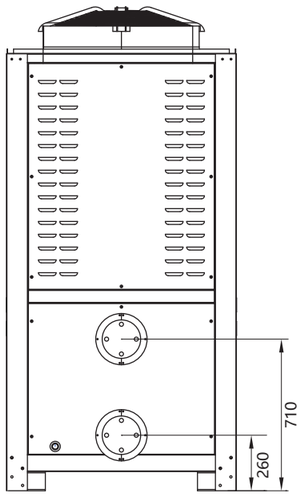

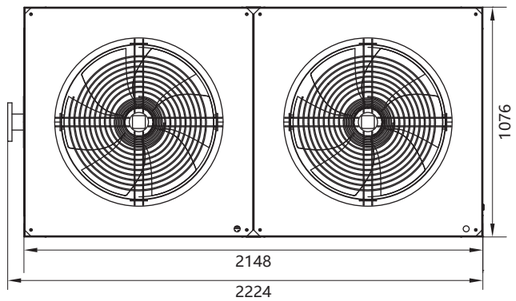

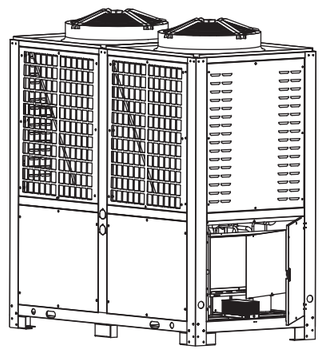

Heating Performance

