

Heat Pump Water Heater

Advanced Heating & Hot Water Systems

Solareast Heat Pump Ltd.

Address: No.73 Defu Road. Xingtan Town, Shunde Foshan, Guangdong, China
Tel: +86 757 29380616
E-mail: heatpump@solareast.com

Website Facebook LinkedIn YouTube

SolarEast

Domestic Heat Pump Water Heater

Our residence boasts an abundance of warmth, encompassing areas where it is seemingly surplus. Fortunately, our domestic hot water (DHW) heat pump adeptly capitalizes on this excess energy to efficiently heat cold water. This innovative approach not only results in economic savings but also contributes positively to the environment.



How It Works

1. A fan draws in air containing heat energy, across the evaporator.

2. The evaporator turns the liquid refrigerant into a gas.

3. The compressor pressurizes the refrigerant into a hot gas.

4. The hot gas inside the microchannel heat exchanger heats the water inside the tank.

5. The refrigerant reverts back to a liquid after heating the water and continues to the evaporator for the process to start again.

6. The cycle continues until the set target temperature is achieved.

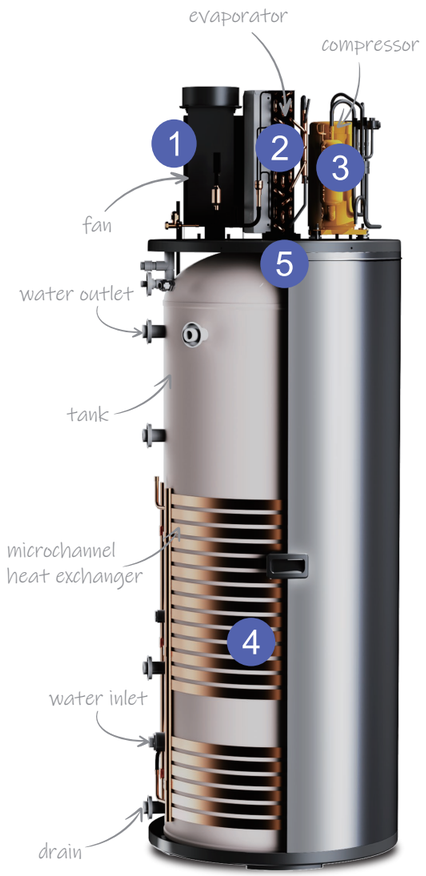



Twelve Great Reasons to Pick Solareast's Heat Pump Water Heater

12

/01



R290 Refrigerant

A zero ODP value and an extremely low GWP value mean that there is no negative impact on the ozone layer. That's what makes propane an environmentally friendly refrigerant, which also maintains the good working performance of heat pump units.

/02



Linkage Control With PV System

This system seamlessly integrates with photovoltaic (PV) systems, optimizing energy management by coordinating the heat pump's operation with solar energy generation. It enhances overall energy efficiency, reduces reliance on grid power, and maximizes the use of renewable energy for sustainable heating and cooling.

/03



Solar Water Heating

Solar water heating systems take advantage of the free heat supplied by the sun to warm domestic hot water .

04



Making It Up To 4X Efficiency Of An Electric Storage Water Heater

Class 1 Energy Rating with COP of 3.8 or higher Excellent Energy Savings of up to 75%.

05



Water Heating at 75°C: Reducing Bacteria by 90%

Water temperature output up to 75℃. Prevents Up to 90% Bacterial Growth. Duplex Stainless Steels 2205 Inner Corrosion (optional).

06



Electrical Impressed Anode

Our system utilizes an electrical impressed anode, eliminating energy loss, preventing corrosion, neutralizing odor-causing bacteria, reducing limescale buildup, and requiring no long-term maintenance or replacement.

07



Power Consumption Module

The power consumption module provides users with direct access to daily electricity consumption data, as well as long-term consumption trends. This functionality empowers customers to understand the energy efficiency of our products compared to traditional boilers, highlighting substantial electricity savings and contributing significantly to the preservation of the ecological environment.

08

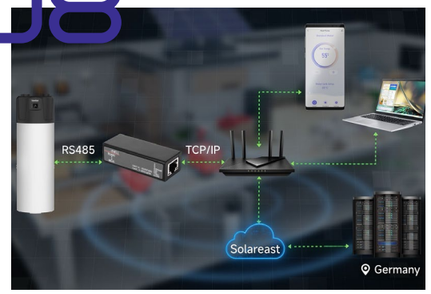

MODBUS Function

The Modbus adapter enables integration of the heat pump system with a home management system, for instance. Consequently, the air-to-water heat pump's output can be instantaneously adapted according to the ongoing heat demand, while considering the building specifications. A range of operating parameters, including operating modes, flow, and room temperature can be gathered, monitored, or modified.

09



Easy To Install

Solareast HPWH models are a sustainable, smart, and simple gas water heater replacement. Because they offer a quick and easy install with minimal clearance requirements and a standard tank footprint, both of the Solareast Heat Pump Water Heaters are ideal for drop-in gas replacement and high-efficiency upgrades.

/10

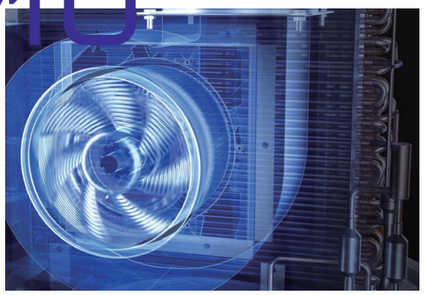

Low Noise Operation

As low as 48db is suitable for quiet environments .

/11

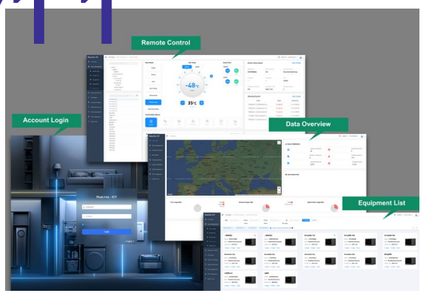

Efficient IoT Solution

Connected with WIFI or DUT to realize remote monitoring of data record.

/12

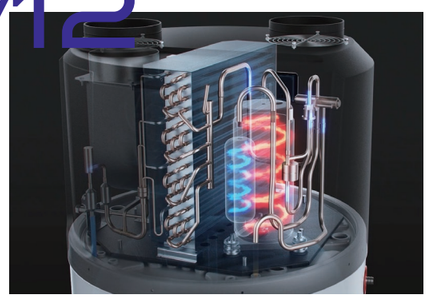

High Efficiency Compressor

Ensure faster heat exchange for more hot water.

Product Dimensions (mm)

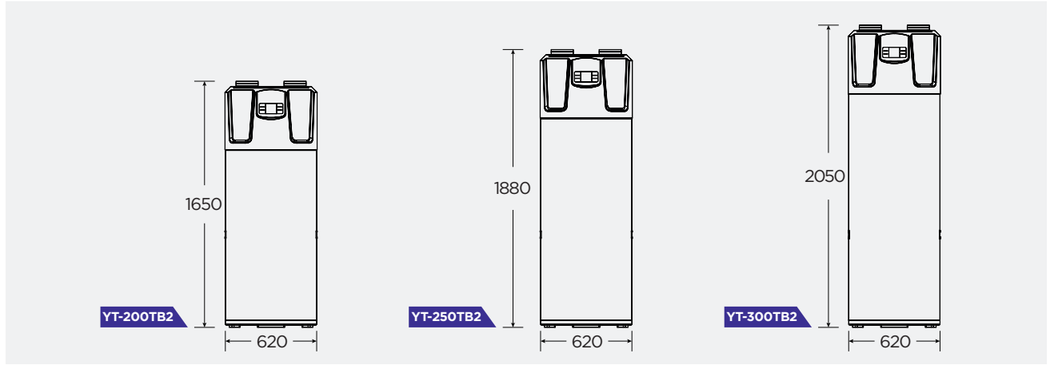

Technical Data

Model			YT-200TB2	YT-250TB2	YT-300TB2
Power Supply			220-240V~/1/50Hz	220-240V~/1/50Hz	220-240V~/1/50Hz
Heating Capacity		W	2800	2800	2800
Rated Hot Water Production		L/h	60	60	60
Rated Power Input		W	629	629	629
Rated Current Input		A	2.8	2.8	2.8
COP		W/W	4.45	4.45	4.45
ElectricHeater	Rated Power Input	W	2000	2000	2000
	Rated Current Input	A	8.9	8.9	8.9
Power Input Max.		W	3000	3000	3000
Current Input Max.		A	13.3	13.3	13.3
Refrigerant Type／Charge／GWP		/	R290/0.45kg/3	R290/0.45kg/3	R290/0.45kg/3
CO_2 Equivalent		/	0.00135t	0.00135t	0.00135t
Working Ambient temperature		℃	-7-46	-7-46	-7-46
Operation Pressure(Low Side)		MPa	0.8	0.8	0.8
Operation Pressure(High Side)		MPa	3	3	3
Maximum Allowable Pressure		MPa	3	3	3
Electrical Shock proof		/	I	I	I
IP Class		/	IP1	IP1	IP1
Water Tank Capacity		L	200	250	278
Water Piping Connections		In	3/4	3/4	3/4
Rated Working Pressure Of Tank		MPa	0.8	0.8	0.8
Air flow Rated		m^3/h	450	450	450
Unit Dimensions (W/H/D)		mm	1650*φ620	1880*φ620	2050*φ620
Shipping Dimensions (W/H/D)		mm	1755*700*700	1985*700*700	2155*700*700
Noise		dB(A)	48	48	48
Net Weight		kg	95	105	115